Top view
Scale: 1:1

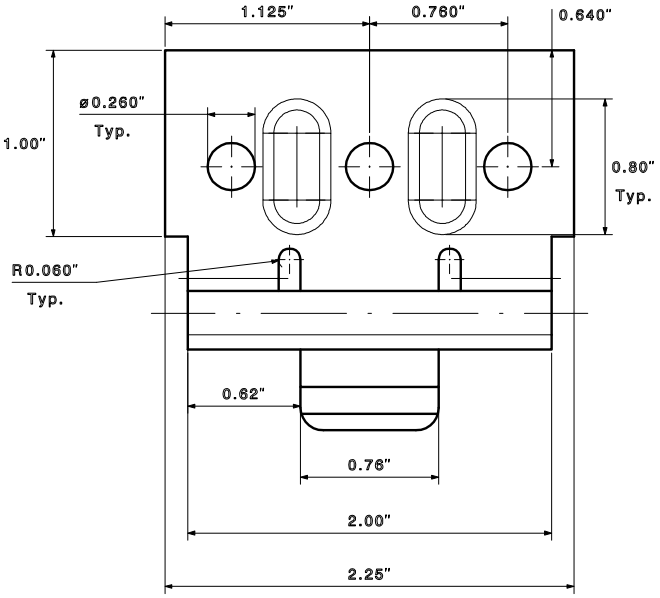

Isometric view
Scale: 1:1

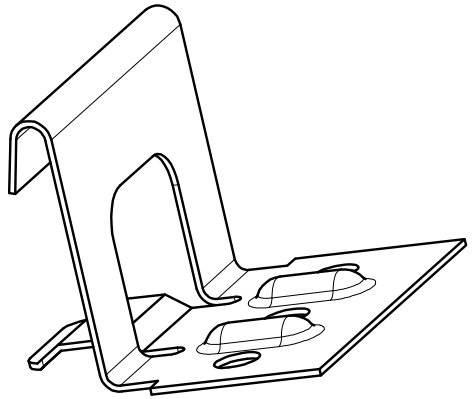

Side view
Scale: 1:1

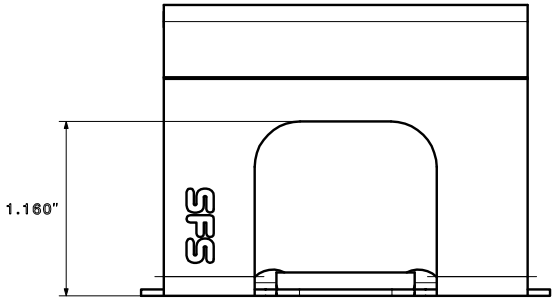

Profile view
Scale: 1:1

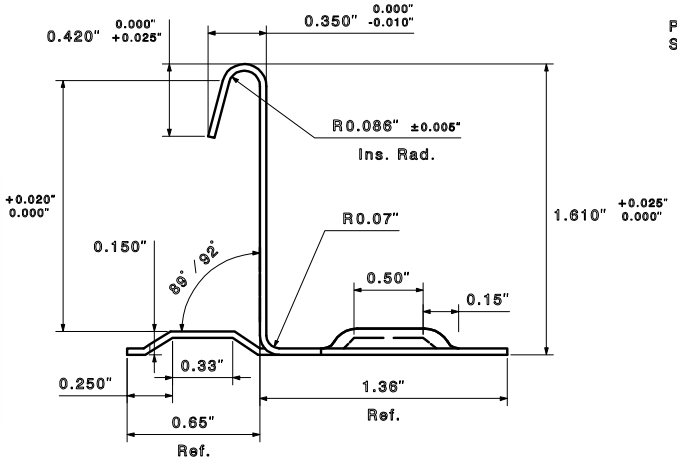

CONFIDENTIALITY AGREEMENT
THIS DRAWING CONTAINS INFORMATION THAT IS THE PROPERTY OF SFS intec INC.,
THIS DRAWING MAY NEITHER BE USED, COPIED, OR REPRODUCED, NOR DISTRIBUTED TO THIRD PARTIES WITHOUT WRITTEN CONSENT.

PART NUMBER:	NONIMAL LENGTH :	REV.	DATE	ZONE	ECN	ECR	INITIAL	DESCRIPTION
		IR	1/20/12					

Material: 20ga Steel
Heat Treat:
Surface:
DIN / ISO:
Remarks:
Other Standard:
Dimensions ☐ Before ☐ After Surface Treatment.
Tool No.:
Cust. Desc.:
Customer Dwg. No.:

SFS intec
P.O. Box 6326
Wyomissing, PA 19610
Ph: 610-376-5751
Fx: 610-376-0932

Drawing Format: A
Description: 1.5" SnapLock 550 Clip
Scale: 1:1

	Name:	Date:
Drawn By:	KJAM	
Checked By:		
Approved:		

FasteningSystems PME

Drawing Number: SD-XP-1814A
D.-Code 1
Reference Number: 1241358